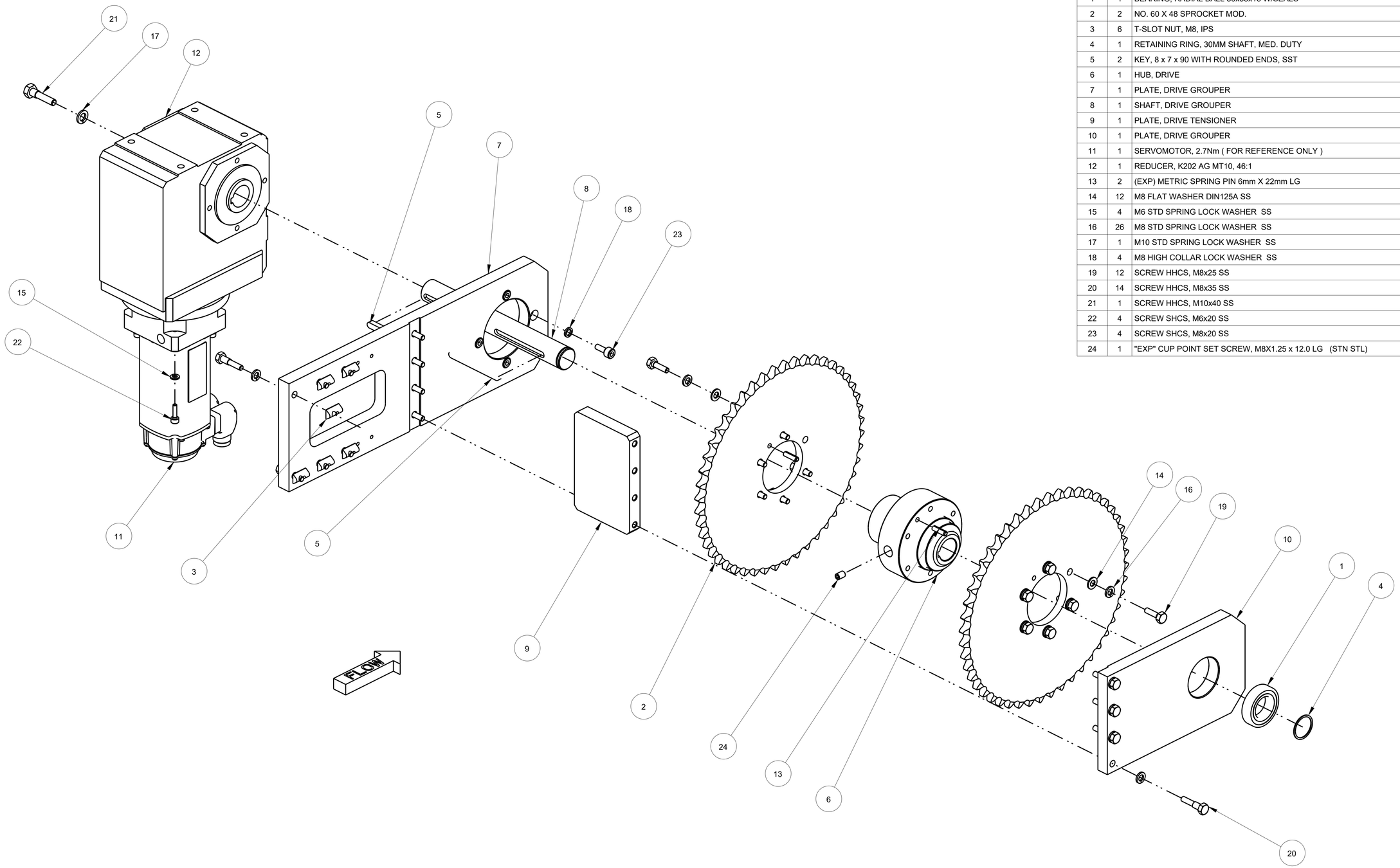

ITEM	QTY	DESCRIPTION	PART NUMBER
1	1	BEARING, RADIAL BALL 30x55x13 W/SEALS	09-037222-0512-0
2	2	NO. 60 X 48 SPROCKET MOD.	U5000248M
3	6	T-SLOT NUT, M8, IPS	U5000314P
4	1	RETAINING RING, 30MM SHAFT, MED. DUTY	U5000855P
5	2	KEY, 8 x 7 x 90 WITH ROUNDED ENDS, SST	U5000884M
6	1	HUB, DRIVE	U5001396M
7	1	PLATE, DRIVE GROUPER	U5001397M
8	1	SHAFT, DRIVE GROUPER	U5001398M
9	1	PLATE, DRIVE TENSIONER	U5001399M
10	1	PLATE, DRIVE GROUPER	U5001400M
11	1	SERVOMOTOR, 2.7Nm (FOR REFERENCE ONLY)	U5006413P_REF
12	1	REDUCER, K202 AG MT10, 46:1	U5006433P
13	2	(EXP) METRIC SPRING PIN 6mm X 22mm LG	U6002435P_EXP
14	12	M8 FLAT WASHER DIN125A SS	U6002509P_EXP
15	4	M6 STD SPRING LOCK WASHER SS	U6002563P_EXP
16	26	M8 STD SPRING LOCK WASHER SS	U6002564P_EXP
17	1	M10 STD SPRING LOCK WASHER SS	U6002565P_EXP
18	4	M8 HIGH COLLAR LOCK WASHER SS	U6002597P_EXP
19	12	SCREW HHCS, M8x25 SS	U6002764P_EXP
20	14	SCREW HHCS, M8x35 SS	U6002766P_EXP
21	1	SCREW HHCS, M10x40 SS	U6002787P_EXP
22	4	SCREW SHCS, M6x20 SS	U6003061P_EXP
23	4	SCREW SHCS, M8x20 SS	U6003079P_EXP
24	1	"EXP" CUP POINT SET SCREW, M8X1.25 x 12.0 LG (STN STL)	U6003334P_EXP

REV.	DESCRIPTION	BY	CHK'D
-	--		
-	--		
-	--		
-	--		
A	1) ADDED ITEMS 24 & 25; 2) ITEM 17 QTY 29 WAS 26; ECN000506	PBK	
		7-Jun-04	
		DATE	DATE

NOTICE: THIS DRAWING AND ALL DATA, DESIGNS, STRUCTURES AND DESCRIPTIONS SHOWN THEREON ARE OUR PROPERTY, ALL PATENTABLE AND/OR COPYRIGHTABLE MATTER THEREON HAS BEEN PROTECTED BY APPLICATIONS FOR PATENT AND/OR COPYRIGHT. THIS DRAWING IS LOANED FOR A SPECIFIC PURPOSE AND MUST BE RETURNED ON DEMAND, AND MAY NOT BE COPIED, REPRODUCTED, OR DUPLICATED IN WHOLE OR IN PART, WITHOUT OUR SPECIFIC AUTHORIZATION IN WRITING.

UNLESS OTHERWISE SPECIFIED: ALL DIMENSIONS MILLIMETER, DO NOT SCALE DRAWING
GENERAL TOLERANCE: HOLE: SLOT: H13 OTHERS: js12
CONCENTRICITY: ±0.02 PERPENDICULARITY: ±0.02/CM ANGULARITY: ±0.25°
BREAK SHARP CORNERS REMOVE ALL BURRS FINISHED SURFACES 3.2 √ (125)
METRIC

MATERIAL: SEE BOM
FINISH:

DRW BY: P. BEBOUT | CHK'D : ..... | ENGR. BY : L. CHUBA
DATE: 07-NOV-03 | DATE : ..... | DATE : .....

TITLE: ASSY, GROUPER DRIVE, RHM

WestRock PACKAGING SYSTEMS ATLANTA, GA, USA

SCALE	MATERIAL CODE	DRW. SIZE	DRW. N°	REV	VER 10	SHEETS
13/32	999	D	U5008729M	-		1/1